Rev	AWO #	Description	Date	Appr
-		RELEASED	11/30/10	

APPROVED: _____

DATE: _____ TITLE: _____

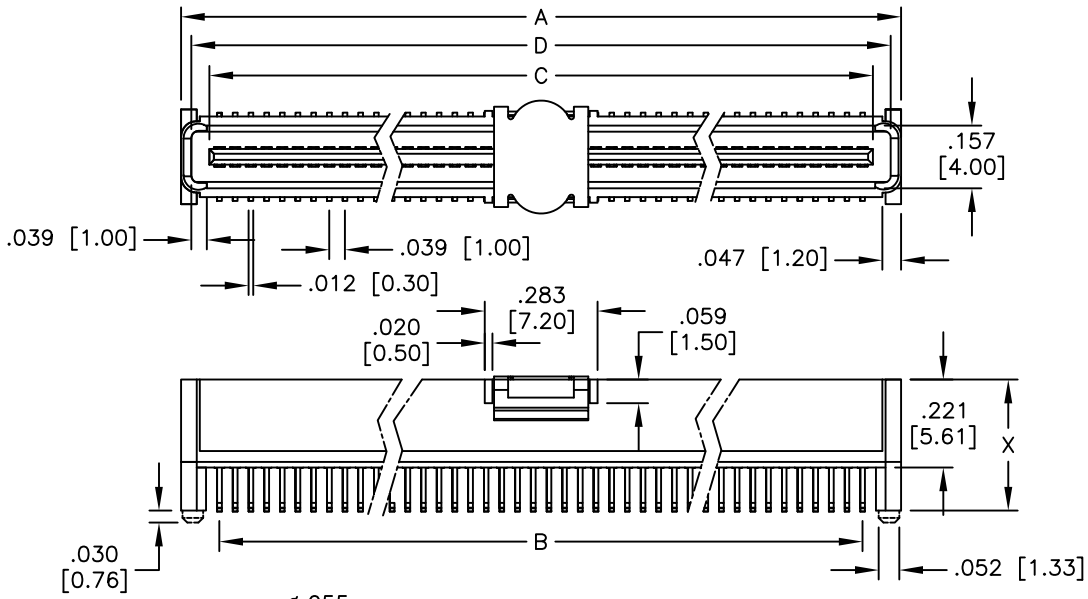

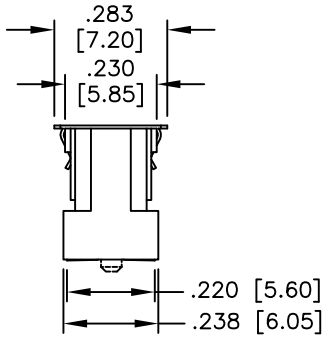

ADAM P/N	X
BB10-PO-XXX-G-6.35-PP-T/R	.250 [6.35]
BB10-PO-XXX-G-7.35-PP-T/R	.289 [7.35]
BB10-PO-XXX-G-8.35-PP-T/R	.329 [8.35]

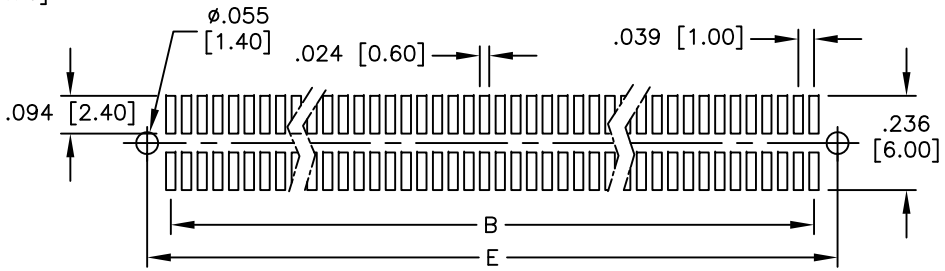

RECOMMENDED PCB LAYOUT

PACKAGED ON TAPE & REEL

Positions: 7 thru 50 per row
A = .039 [1.00] x (No. of Positions per row) + .154 [3.90]
B = .039 [1.00] x (No. of Positions per row) − .039 [1.00]
C = .039 [1.00] x (No. of Positions per row) + .012 [0.30]
D = .039 [1.00] x (No. of Positions per row) + .102 [2.58]
E = .039 [1.00] x (No. of Positions per row) + .094 [2.40]

SPECIFICATIONS:
Material:
Insulator: Hi−temp thermoplastic, rated UL 94V−0
Insulator color: Gray
Contacts: Copper Alloy
Pad: Metal
Plating:
Gold flash over Nickel underplate overall.
Electrical:
Current rating: 0.5 Amps
Contact resistance: 40 mohms max @ DC 1mA
Insulation resistance: 100 Mohms min @ DC 100V
Dielectric withstanding voltage: AC 500V for 1 minute
Operating Temperature: −25°C to +85°C
Environmental:
Lead free, RoHS compliant
Recommended soldering temp: 260°C for 5 seconds

RoHS COMPLIANT

UNLESS OTHERWISE SPECIFIED
ALL DIMENSIONS ARE INCHES [MM]
TOLERANCES: EXCEPT AS NOTED

INCHES		HOLES	
.X	± .10	Ø.X	±.10
.XX	± .020	Ø.XX	±.015
.XXX	± .015	Ø.XXX	±.010

APPROVALS		DATE
DRAWN	DY	11/30/10
CHECKED		
APPROVED		

ADAM TECH
909 Rahway Avenue, Union, NJ 07083
Phone: 908-687-5000 Fax: 908-687-5710

TITLE
.039 [1.00] BOARD TO BOARD PLUG, SMT TYPE

SIZE	PART NO.	REV.
X	BB10-PO-XXX-G-X.XX-PP-T/R	-

REF: S00058T | SCALE: NTS | SHEET 1 OF 1